glowway®

Lighting your way in the dark



PRODUCT INFO

Glowway Oy Ltd
Ohdakkeentie 2
06100 Porvoo
FINLAND

Tel: +358 400 492 362
info@glowway.com
www.glowway.com

v2.8

glowway®
Lighting your way in the dark

CONTENT

INSTALLATION INSTRUCTIONS FOR GLASS TILES……3

CARE AND MAINTENANCE INSTRUCTIONS FOR GLASS PRODUCTS……5

CARE AND MAINTENANCE INSTRUCTIONS FOR POLYCARBONATE PRODUCTS……6

GLASS TILES DATA SHEET……7

GENERAL TERMS AND CONDITIONS……10

glowway®
Lighting your way in the dark

INSTALLATION INSTRUCTIONS FOR GLASS TILES

- Glass products should be installed according to well-known good construction practices unless stated otherwise.
- Prior to installation, please ensure the tiles purchased are suitable for the application and are thoroughly inspected. The coated backside of the glass tiles should be protected from scratches and mechanical damages during product control and the installation process.
- Reclamations must be done according to the general terms and conditions provided by Glowway. Ensure your installer is aware of the expected completion of the tiles and there are sufficient amount of tiles for the area. Also ensure that the installation area beneath the tiles and the surface is sufficiently cleaned before beginning of the installation. Grit etc. left underneath the tiles can cause breaking of the tiles.
- The installation of Glowway tiles requires workmanship and skills for tiling and familiarization with instructions and the products. The durability of glass tiles can only be sufficient if the installation is done professionally and according to the instructions.
- If the tiles are placed sequentially, the mortar used for installing should have a drying time long enough so that the lines of tiles can be made vertically and horizontally straight and positioned correctly. The installation should be completed in accordance with the given drying time and working life of mortar. If the mortar is too dry, the attachment of the tiles might not be optimal.
- The underlying surface of the tiles should be solid and the material of the tiles has to be taken into consideration when planning the end use. The tile should not be able to move after installation and should be firmly in place. The mortar should be spread evenly under each tile and all the tiles should be 100 % soundly bedded in the mortar without any space for air underneath. Uneven spreading of mortar can result in poor attachment or breaking of the tile.
- The tiles should not be placed butt-joint. Water-resistant epoxy sealer or water resistant grout should be used between the tiles. The possibility for thermal expansion should be taken into consideration when installing the tiles. **It is important that no water gets underneath the tile.**
- All freshly installed tiles should be well protected until the mortar is fully dry. Multi-sensory tiles should be covered in a way that there is no pressure against the tiles from any direction. Walking etc. on the tiles is prohibited during the drying period.
- Glowway tiles are recommended to be installed at the final stage of constructing to prevent damaging the tiles. After installation, the tiles should be sufficiently protected until the constructing is completed. The tile should not be driven over with heavy machinery or vehicles.

The dispatch and installation of Glowway tiles require:

- inspecting the quality of the products upon dispatch
- making an approved test-installation of the products
- protecting the products while the mortar is drying
- keeping the tiles in a locked space and sufficient monitoring of the worksite

glowway®
Lighting your way in the dark

INSTALLATION INSTRUCTIONS FOR GLASS TILES

1. Glass tiles

Tile is inserted in a groove and leveled with the surface

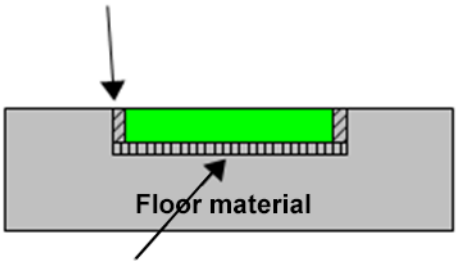

Attachment mortar

2. Glass rods and buttons

Tile should rise 5 mm above floor level

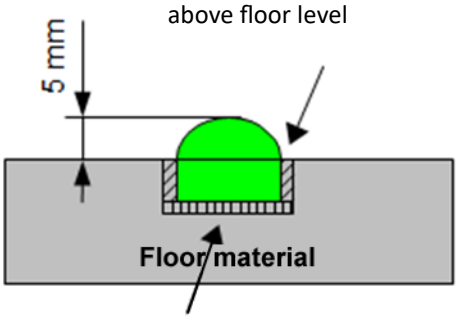

Attachment mortar

The groove in the surface material should be 6-10 mm wider than tile width and 5 mm deeper than tile thickness. 3 - 5 mm width should be left between the tiles for seam. Exact tile width and thickness should be verified before installation.

Use appropriate attachment mortar for installation of the tiles. Do **not** use glue for attachment!

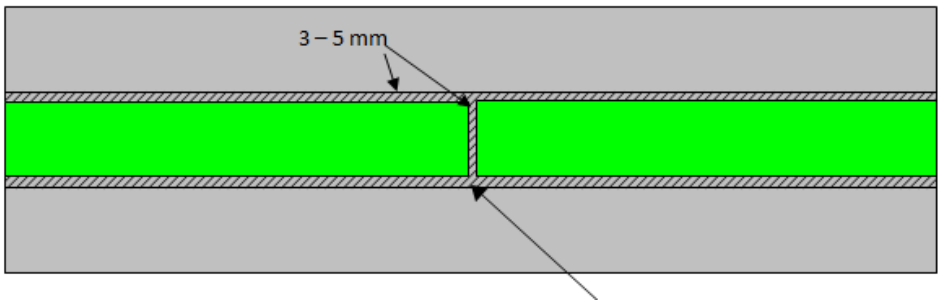

Tiles should be in line with each other. Sealer should be used between tiles. Butt joint should **not** be used. **It is important that no water gets underneath the tile.**

With accessibility products the gap between the tiles (above floor level) shall be seamed.

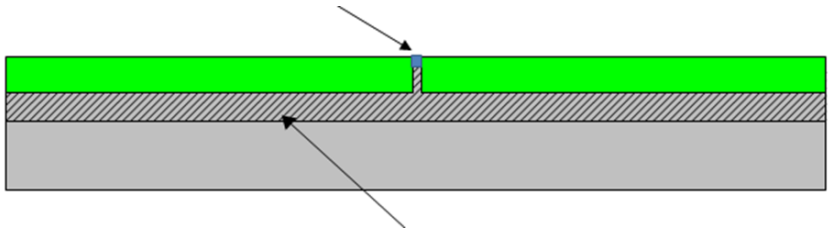

Attachment mortar should cover evenly the whole area beneath the tile. Uneven distribution of attachment mortar can result in poor attachment or breaking of the tile.

glowway®
Lighting your way in the dark

CARE AND MAINTENANCE INSTRUCTIONS FOR GLASS PRODUCTS

1. Characteristics of photoluminescent glass products

Use warm water and general neutral cleaning agents (pH 6-8) to clean the products.

Hydrofluoric acid or its by-products must **not** be used in cleaning of the glass tiles. Also the use of cleaning varnishes containing abrasive components and abrasive brushes should be avoided since they can damage the surface of the glass tile. Furthermore, any conservatives that create a film or membrane on the surface of the polycarbonate products can weaken the anti-slipperiness of the product and are not recommended.

2. Principles of cleaning

- Clean the glass- and the surrounding surfaces regularly.
- Use general neutral (pH 6-8) cleaning agents according to the manufacturers' instructions and recommendations.
- Avoid cleaning varnishes containing abrasive components as well as abrasive brushes.
- Clean the glass surfaces with vacuum cleaner, cleaning cloth or soft brush (also mechanical brush cleaning). The tile it-self endures also pressure cleaning but it is not recommended since the water might damage the seal. It is important that no water gets underneath the tile.

3. Cleaning after installation

The products must be cleaned after installation. Loose material is to be swept with soft brush. Afterwards the products are to be cleaned with suitable cleaning agents.

4. Regular cleaning and stain removal

Depending on the sight, the cleaning should be done several times per day, daily or weekly. Normally the cleaning can be done with warm water with added general neutral (pH 6-8) cleaning agents.

Stain removing should be done according to recommendations of cleaning professionals. Try first to small area to ensure the applicability.

glowway®
Lighting your way in the dark

CARE AND MAINTENANCE INSTRUCTIONS FOR POLYCARBONATE PRODUCTS

1. Characteristics of photoluminescent polycarbonate products

Polycarbonate does not endure alkaline cleaning agents, acids (e.g. sulphur acid, nitric acid, acetic acid) or solvents (e.g. acetone, toluene, dichloromethane, turpentine, paint-stripper). In addition, polycarbonate does not endure water heated over 60◦C. Also the use of cleaning varnishes containing abrasive components and abrasive brushes should be avoided since they grind the surface of the polycarbonate products damaging it. Furthermore, any conservatives that create a film or membrane on the surface of the polycarbonate products can weaken the anti-slipperiness of the product and are not recommended.

Use warm water and general neutral cleaning agents (pH 6-8) to clean the products.

2. Principles of cleaning

- Clean the polycarbonate- and the surrounding surfaces regularly.
- Use general neutral (pH 6-8) cleaning agents according to the manufacturers' instructions and recommendations.
- Avoid cleaning varnishes containing abrasive components as well as abrasive brushes.
- Clean the surface with vacuum cleaner, cleaning cloth or soft brush (also mechanical brush cleaning). Do not use water over 60◦C warm to avoid cracking of the polycarbonate.

3. Cleaning after installation

The products must be cleaned after installation. Loose material is to be swept with sift brush. Afterwards the products are to be cleaned with general neutral (pH 6-8) cleaning agents.

4. Regular cleaning and stain removal

Depending on the sight, the cleaning should be done several times per day, daily or weekly. Normally the cleaning can be done with warm water with added general neutral (pH 6-8) cleaning agents.

Stain removing should be done according to recommendations of cleaning professionals. Try first to small area to ensure the applicability.

glowway®
Lighting your way in the dark

DATA SHEET

Manufacturer
Glowway Oy Ltd
Ohdakkeentie 2
06100 Porvoo
Finland

Tel: +358 10 328 7838
info@glowway.com
www.glowway.com
VAT no. FI21396956

PHOTOLUMINESCENT GLASS TILES

Product description
Glowway glass tiles are manufactured from float or tempered glass with photoluminescent pigment on the bottom side. Some models have an opaque surface or screen print patterns on the top or bottom, and some models have anti-slip structure combined in the screen print pattern.

Sizes & tolerances
The sizes of different models can be found from the Glowway web page. Glowway tiles are mostly handicraft products and the tolerances may vary but mostly max tolerances for the glass tiles are length +/- 1 mm, width, +/- 1 mm, thickness +/- 1 mm, and curvature (side, top, bottom) +/- 1 mm.

Color
The body color and afterglow color of safety grade tiles is normally green. Warning tiles' afterglow color is yellow but the body color is more orange. By using yellow screenprint lines on the surface the perceived body color of the warning tile is yellow. Other custom colors can theoretically also be used but they are not necessarily safety grade. The daylight and afterglow colors as well as the afterglow strength of the tiles may vary slightly due to reasons beyond our control including variations of the natural photoluminescent materials, the lighting, surface variations, glass variations, method of application, and thickness of film applied.

Installation
Please refer to installation Instructions for information as to the installation of these products.

Care and Maintenance Recommendations
Please refer to care and maintenance instructions for technical information as to the care and maintenance of these products.

Photoluminescent pigment
According to the manufacturer the afterglow pigment is not considered flammable, poisonous, radiative or corrosive substance. The manufacturer gives minimum 25 years working life for the photoluminescent pigment. The strength of the luminance might decrease over time.

Disposal
Regarding the disposal, according to EU Regulation N:o 1272/2008 the products are considered as general waste.

Photoluminescence test by SP Technical Research Institute of Sweden
Tests MTk3P04444-K01 - KO6
Glass tiles tested according to standards (ISO 16069:2004, DIN 67510-1:2009, ASTM E2073-10).

	ISO	DIN	ASTM	
Activation conditions				
Light type	Xenon	Xenon	Fluorescent	
Activation luminance level	1000 lx	1000 lx	1 ft/c (n. 10 lux)	
Activation time	5 min	5 min	60 min	
Color of the light	6500 K	6500 K		
Following conditions to be fulfilled (mcd/m2)				**Glowway average Glass products**
10 min	>20	>20	>20	**338**
60 min	>2,8	>2,8	>2,8	**44,1**
Time to 0,3 mcd/m2	340	340	-	**3097**

According to PSPA (The Photoluminescent Safety Products Association, see http://www.pspa.org.uk) the samples fulfil requirements for PSPA class D (best class).

PSPA Class	mcd/m2 after 2 minutes	mcd/m2 after 10 minutes	mcd/m2 after 30 minutes	mcd/m2 after 60 minutes	Decay time (min) to 0,3 mcd/m2
D	1100	260	85	35	
C	690	140	45	20	
B	210	50	15>	7	
A	108	23	7	3	
Glowway average Glass products	**1534**	**338**	**100,4**	**44,1**	**3097**

glowway®
Lighting your way in the dark

DATA SHEET

Tests according to EN ISO 10545:2012, tested by ZAG Ljubljana, Slovenian National Building and Civil Engineering Institute, Department for Materials, test reports no: P1338/13-480-1, P841/14 – 480 – 1.
Slip resistance tested according to DIN 51130:2014-02 (tiles with antislip patterns), tested by Research Laboratory of Ceramics and Building Materials, tests report no: 26/1/LB/2017.

DETERMINATION OF MODULUS OF RUPTURE AND BREAKING STRENGTH		
All 8 mm thick glass products (float glass):		
Breaking strength average	**1824N** / 186 kg / 410 lbs	Minimum >800N
Modulus of rupture average	**40,6 N/mm2**	Minimum >18 N/mm2
Photoluminescent glass rod (float glass):		
Breaking strength average	**6200N** / 632 kg / 1394 lbs	
Modulus of rupture average	**76,1 N/mm2**	
DETERMINATION OF RESISTANCE TO SURFACE ABRASION		
Products with antislip surface:	Number of revolutions for visible effect: 1500, class 3	
DETERMINATION OF CHEMICAL RESISTANCE		
Products with etched surface:		
HC1 solution 3%:	**A**	class A: No visible effect
Citric acid solution 100g/l:	**A**	class B: Visible effects on cut sides
KOH solution 100g/l:	**A**	class C: Visible effects on cut sides, non-cut sides and on the proper surface
NH4CI solution 100g/l:	**A**	
NaC10 solution 20g/l:	**A**	
Products with antislip screenprint stripes:		
HC1 solution 3%:	**A**	
Citric acid solution 100g/l:	**A**	
KOH solution 100g/l:	**A**	
NH4CI solution 100g/l:	**A**	
NaC10 solution 20g/l:	**A**	
DETERMINATION OF RESISTANCE TO STAINS		
Products with antislip screenprint stripes:		class 5: stain removed with running hot water
Green staining agent	**5**	class 4: stain removed with the weak cleaning agent and with running hot water
Red staining agent	**5**	class 3: stain removed with the strong cleaning agent and rotating brush
Solution of Iodine 13g/l	**5**	class 2. stain removed with suitable solvents (Hcl, KOH, acetone and other specific solvents)
Olive oil	**5**	class 1: stain is impossibly removed with any of the test procedures
Products with etched surface:		
Green staining agent	**3**	
Red staining agent	**3**	
Solution of Iodine 13g/l	**3**	
Olive oil	**3**	
DETERMINATION OF SLIP RESISTANCE (PTV Value)		
Products with anti-slip patterns:	Anti-slip properties class: **R13**	R-ratings: R13 = best R12 = good R11 = better R10 = poor R9 = very poor
Products with etched surface:		
Dry surface longitudinal y	**121**	Slip potential (PTV-value):
Dry surface lateral y	**111**	High 0-24
Wet surface longitudinal y	**44**	Moderate 25-35
Wet surface lateral y	**44**	Low 36+
FIRE RATING		
General Euroclass fire rating for glass	**A1**	

glowway®
Lighting your way in the dark

DATA SHEET

PHOTOLUMINESCENT ANTISLIP STEPFRONT

The photoluminescent antislip stepfront consists of a glass and rubber part. The glass is standard float glass with photoluminescent pigment added in the bottom side.

Sizes & tolerances
The sizes of different models can be found from the Glowway web page. Glowway tiles are mostly handicraft products and the tolerances may vary but mostly max tolerances for the glass tiles are length +/- 1 mm, width, +/- 1 mm, thickness +/- 1 mm, and curvature (side, top, bottom) +/- 1 mm.

Color
The body color and after-glow color of safety grade tiles is normally green. The daylight and afterglow colors as well as the afterglow strength may vary slightly due to reasons beyond our control including variations of the natural photoluminescent materials, the lighting, surface variations, glass variations, method of application, and thickness of film applied.

Installation
Please refer to installation Instructions for information as to the installation of these products.

Care and Maintenance Recommendations
Please refer to care and maintenance instructions for technical information as to the care and maintenance of these products.

Friction test by Geologcal Survey of Finland

Test no. GTK/476/11.02.00/2016.
Tests done according to standard EN 14231 (2003): Natural stone test methods: Determination ofthe slip resistance by means of the pendulum tester / CEN TS 16165 annex C.

Stone tested: Agglomerated stone slabs:

Test piece WAXED	**DRY**	**DRY**	**WET**	**WET**
	Top of stripe	Top of stone	Top of stripe	Top of stone
Average direction a	74	102	36	32
Average direction b	73	73	34	31
SRV average—Dry surface	74	88	35	32

Test piece NON-WAXED	**DRY**	**DRY**	**WET**	**WET**
	Top of stripe	Top of stone	Top of tripe	Top of stone
Average direction a	55	45	37	33
Average direction b	53	50	39	31
SRV average—Dry surface	54	48	38	32

Wearing test by Contesta

Test no. 21200038-025 according to SFS-EN 1338 (Böhme test).

Samples
Orderer provided a 300 x 300 x 70 mm stone slab which was manufactured on 17.3.2016, mixture 10102. On the top front part on 30 mm distance was imbedded a 12 mm wide glass and 20 mm wide rubber strip. Rapid-cement was used as adhesive in the stone slab.
Test setup
Four 71 x 71 x 70 mm pieces were cut from the stone slab for the test. (2 pieces of only concrete material and 2 pieces with glass and rubber) . Test pieces were dried to the constant weight in +105 ±5 °C before the test. The tests were conducted on the top side of the slab according to standard SFS-EN 1338. The test was begun with the slab being of 25 d of age.

Test results
Height difference of the test pieces was measured according to the standard and based on the measuring results. Comparison pieces wore 1,35 - 1,42 mm and the pieces with Glow-way glass-rubber wore 0,05 - 0,09 mm. The strips held in place well.

Visibility test by Finnish Federation of the Visually Impaired (FFVI)

Test conducted: 14.4.2015.

Test situation
- Example steps that has 12 mm retroreflective stripe.
- The aim of the test was to determine a suitable width of the black contrast stripe to mark the front of the step.
- A few tests were carried out with stripes of different widths.
- The tests ended up using one or two 10 mm black fillets either next to, or on both sides of the 12 mm retroreflective stripe.

The visibility of the stripes were tentatively tested in light level of 300 lx. The example step was placed on a pale surface, so that on both sides of the stripe there is a lightly colored area in the width of a stair. The step was examined by standing normally.

Test subjects
A total of 11 visually impaired people participated in the examination.
- Six of them have severe visual impairment
- Three of them have moderate visual impairment
- Two of them are classified as blind who lack visual orientation.

Test results
Using the contrast strip alongside the photoluminescent stripe would be helpful to the majority of people who have visual impairments to distinguish the edge of the step.

glowway®
Lighting your way in the dark

GENERAL TERMS AND CONDITIONS

1. General
All deliveries, services and quotations by GLOWWAY are made exclusively on the basis of these terms and conditions. Other terms and conditions apply only if they are accepted in writing by GLOWWAY. This also applies if the customer confirms a quotation by GLOWWAY with reference to its own terms and conditions of business or purchase.

1.1 Contract parties and Delivery Contract
The contract for delivering the goods and/or the order and the order confirmation (Delivery Contract), together with these terms and conditions, form a contract (hereinafter referred to as "Delivery Contract") by which GLOWWAY (Supplier) commits to supply to the customer (Orderer) the goods (hereinafter referred to as "Products")

Unless otherwise agreed in the Delivery Contract, these terms and conditions apply to all deliveries between the Supplier and Orderer. Furthermore, these terms and conditions apply to all possible future delivery contracts between the Supplier and Orderer unless using an updated version of the terms and conditions is agreed upon.

1.2 Application of terms and conditions and order of reading
The Delivery Contract and these terms and conditions together form a contract entirety which will be applied to the delivery of the products. In case of a conflict between the Delivery Contract and the terms and conditions, the terms in the Delivery Contract will be used primarily.

1.3 The validation of the Delivery Contract
The Delivery Contract is valid when both parties agree to the terms of the Delivery Contract by signing the contract and/or when the Supplier confirms the order made by the Orderer by providing the Orderer electronically the order confirmation.

The Supplier is not obligated to deliver the Products based on the order but confirmation from the Supplier is needed for the Delivery Contract to be valid.

The Supplier is entitled to check the Orderer's credit reference if it chooses to do so.

2. Terms of payment
The agreed prices are applicable. Supplier is not bound by prices appearing in price lists. Prices are subject to adjustment at any time, without prior notice, with reference but not limited to changes in market conditions, inflation or exchange rate fluctuations. In the case of follow-up orders, Supplier is not bound by prices from prior orders.

Unless otherwise agreed, the invoice shall be dated with the day of the order confirmation by Supplier. 50 % of the total invoice amount shall be paid into Glowway's account before the manufacturing of the products begin. The remaining 50 % of the invoice amount, unless otherwise agreed, shall be paid into Glowway's account before the goods are shipped/collected.

2.1 Payment shall be made according to the due date. Interest shall be charged on overdue payments from the due date on, as stipulated in current legislation on interest.

2.2 The Orderer shall pay the invoice even if he has made a complaint or reclamation.

2.3 Prices stated by Supplier are understood to be ex-works excluding the cost of delivery, unless otherwise agreed.

2.4 If the Orderer defaults on payment or circumstances indicating deterioration in the Orderer's financial position become known, Supplier is entitled to withdraw from the contract and to discontinue agreed deliveries. In this case all Supplier accounts receivable are immediately due for payment.

3. Terms and time of delivery
Unless otherwise agreed, the terms "Ex Works" / EXW INCOTERMS 2010 shall apply. The Supplier may, if so agreed, arrange for shipment at the Orderer's cost and risk. Supplier's default transport packaging shall be included in the price of the delivery unless otherwise agreed.

3.1 Unless otherwise agreed, delivery times / delivery dates are only binding on Supplier if they are explicitly confirmed in writing. Claims for compensation on grounds of late delivery are precluded unless Supplier deliberately or negligently fails to comply with the conditions of the delivery. In this case liability is limited to the immediate damage due to delay. No compensation will be paid for lost profits, losses due to business interruption and costs or expenses related to covering purchases.

4. Documentation and samples
Dimensional and text data as well as illustrations appearing in Supplier documents of any kind are not binding, unless Supplier explicitly confirms these data when concluding the contract. In case Supplier provides product samples to the Orderer, Supplier commits to provide end products with equivalent quality.

Supplier provides the Orderer with the necessary installation instructions and product specifications. General care and maintenance instructions for ceramic tiles are accordingly applied to Supplier's glass products.

5. Legal Norms and Government Directives
Orderer must inform Supplier about legal norms and government directives affecting the delivery, equipment or use of the goods which are the subject of enquiries or orders. This obligation to provide information includes in particular provisions regarding the nature and use of the goods to be supplied, safety regulations, health regulations, ordinances and specifications regarding prohibited substances, import regulations, etc.

5.1 If this obligation to provide information is infringed, Supplier denies any liability. In such cases, the Orderer undertakes to indemnify Supplier in full for all claims arising therefrom.

glowway®
Lighting your way in the dark

GENERAL TERMS AND CONDITIONS

5.2 The Orderer guarantees to Supplier that the manufacture of Orderer defined customized products ordered by the Orderer is admissible without infringing the rights of third parties, in particular intangible property rights or industrial property rights. Otherwise Supplier can withdraw from the contract with full indemnification by the Orderer. Furthermore, the Orderer undertakes to indemnify Supplier in full for all claims by third parties for infringement of their rights.

6. Supplier is entitled to withdraw from a delivery contract without consequent liability for damages if unforeseen problems, which cannot be resolved with reasonable effort, arise during manufacture (Force Majeure). Supplier is obliged to inform the Orderer immediately when the Force Majeure has emerged.

7. Incoming returned goods inspection at Supplier confines itself to identifying the goods, reviewing the delivery and inspection documents, ascertaining shipping damage which is clearly apparent externally and checking the quantity on the basis of estimates. All costs arising from quality defects, deviations in quantity or delivery which is late or to the wrong address will be charged to the Orderer.

Orderer is responsible for determining the suitability of the products in the project.

8. Unforeseen events such as force majeure and other occurrences outside the control of Supplier or its sub-suppliers release Supplier from the obligation to make partial or complete delivery. Compensation claims of any kind are precluded in this case.

9. Unless otherwise agreed, goods may only be returned with the consent of Supplier.

10. Retention of Title
The goods remain the property of Supplier until all payments have been received in full. Supplier is entitled to request the return of the goods if the Orderer fails to fulfill his contractual obligations. This also applies to delays in payment by the Orderer.

10.1 The Orderer is obliged to treat with care the goods delivered to him, insure them appropriately and maintain them as far as necessary.

10.2 As long as the purchase price has not yet been paid in full, the Orderer must inform Supplier immediately in writing if the goods are subject to third-party liens or if the goods are otherwise attached by third parties.

11. Notification of Defects
The Orderer must inspect the goods promptly after delivery and in seven (7) days' time notify Supplier in writing if any defect is apparent. If the Orderer fails to make such notification, the goods are deemed to be accepted, unless the defect is such that it was not apparent upon inspection. If such a defect becomes apparent later, notification must be made immediately after it is discovered; otherwise the goods are deemed to be accepted, even considering this defect.

11.1 The period of limitation for claims by the Orderer in respect of manufacturing defects is three (3) years. This commences on the delivery of the goods.

11.2 Upon notification of a defect Supplier has the right to have the defect thus notified examined by specialists selected by Supplier.

11.3 The goods which are the subject of the complaint must in any case be properly stored until Supplier gives its consent for their return. Any consequential costs arising from unconfirmed return deliveries will be charged in full to the Orderer.

11.4. In the event of defective goods the Orderer is entitled to subsequent delivery of goods free of defects. If subsequent performance fails, the Orderer is entitled to reduce the purchase price.

11.5 Liability for consequential damage arising from defects of all kinds is precluded to the legally permissible extent. This applies both to indirect and direct damage and also to lost profits. Any type of reworking of components without the consent of Supplier, or improper treatment or storage, results in the loss of all claims against Supplier in respect of defects.

11.6 If action by the Orderer to avert risks (e.g. product recalls) is necessary due to defective goods supplied by Supplier, this action must be coordinated with Supplier before it is implemented. Otherwise the Orderer has no entitlement to claim for damages against Supplier.

12 Supplier is liable in the event of intent or gross negligence, also of its representatives or persons employed to perform its obligations, in accordance with legal provisions; also if Supplier culpably fails to fulfill material contractual obligations. In the absence of deliberate breach of contract by Supplier, the liability of Supplier for damages is limited to the foreseeable typical damage occurring.

12.1 Liability for culpable injury to life, limb or health and liability under product liability legislation remain unaffected.

12.2 Unless otherwise explicitly set forth in the foregoing, liability of Supplier is precluded.

13. Termination of contracts
The termination of contracts is always subject to the written consent of Supplier.

14. Confidentiality
All models, sketches, explanations and samples from Supplier are confidential information which has to be kept secret and may not be made accessible to unauthorized third parties.

15. Jurisdiction
Place of jurisdiction is Finland and Finnish law is applied.

16. Escape Clause
If one or more of these provisions and the other agreements concluded should be wholly or partly invalid or impracticable or subsequently lose its legal effect or feasibility, the effectiveness of the remaining provisions shall not thereby be affected. The invalid provision will then be replaced by the contracting parties in a manner resembling as closely as possible the intention of the invalid provision.

17. These terms and conditions are subject to change without prior notice and valid until altered by Supplier.

glowway®
Lighting your way in the dark

Glowway Oy Ltd
Ohdakkeentie 2
06100 Porvoo
FINLAND

Tel: +358 400 492 362
info@glowway.com
www.glowway.com

VAT no: FI21396956

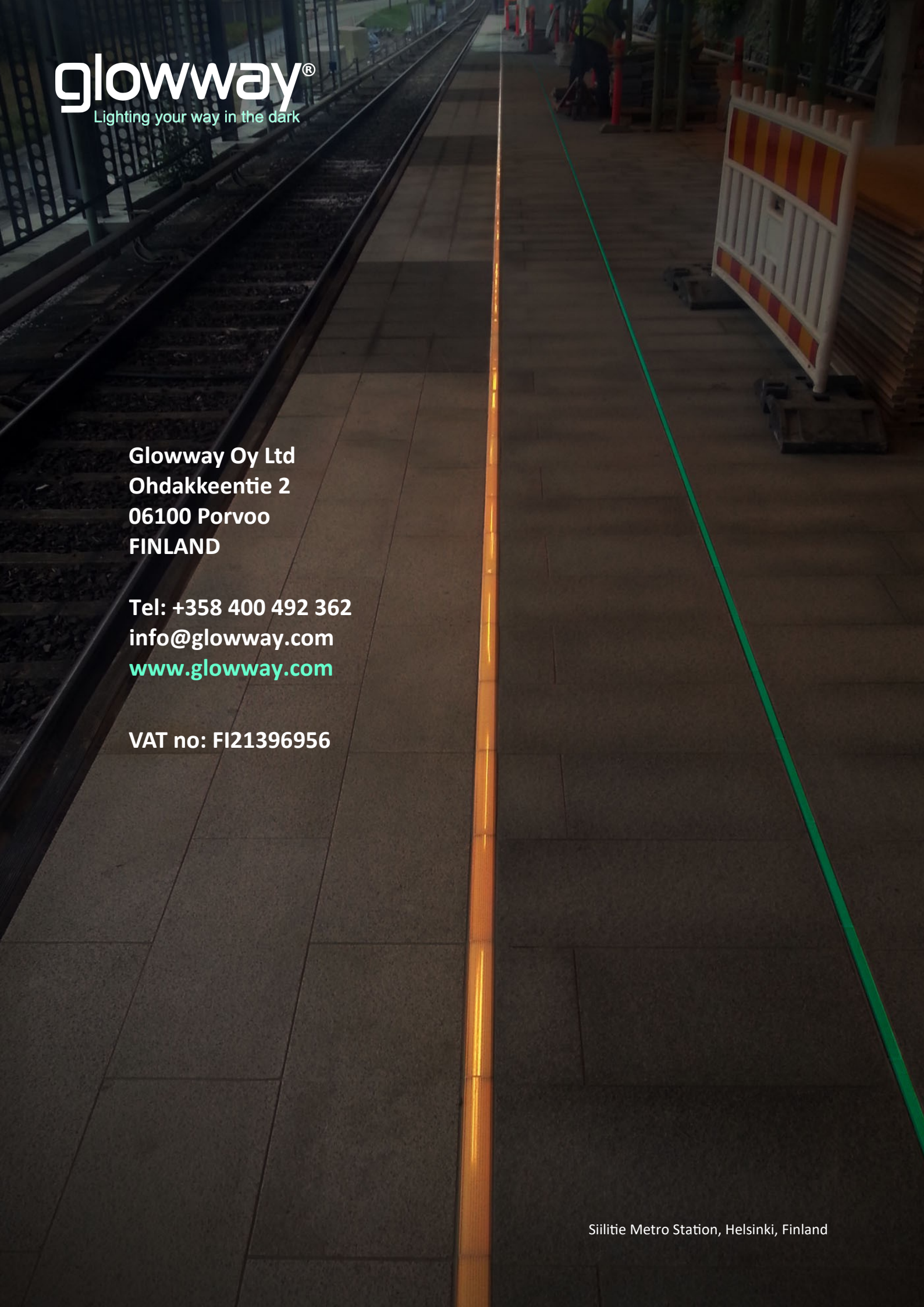

Siilitie Metro Station, Helsinki, Finland